ARP-Z800

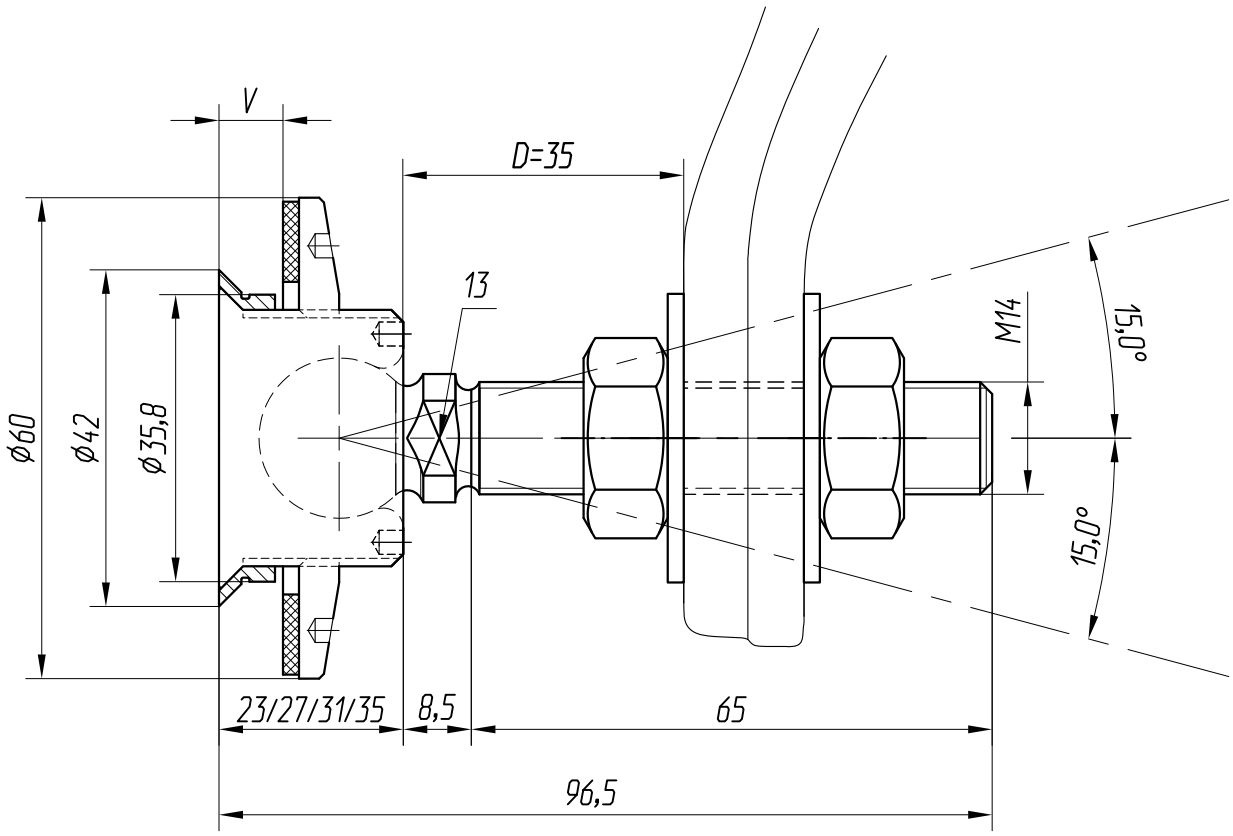

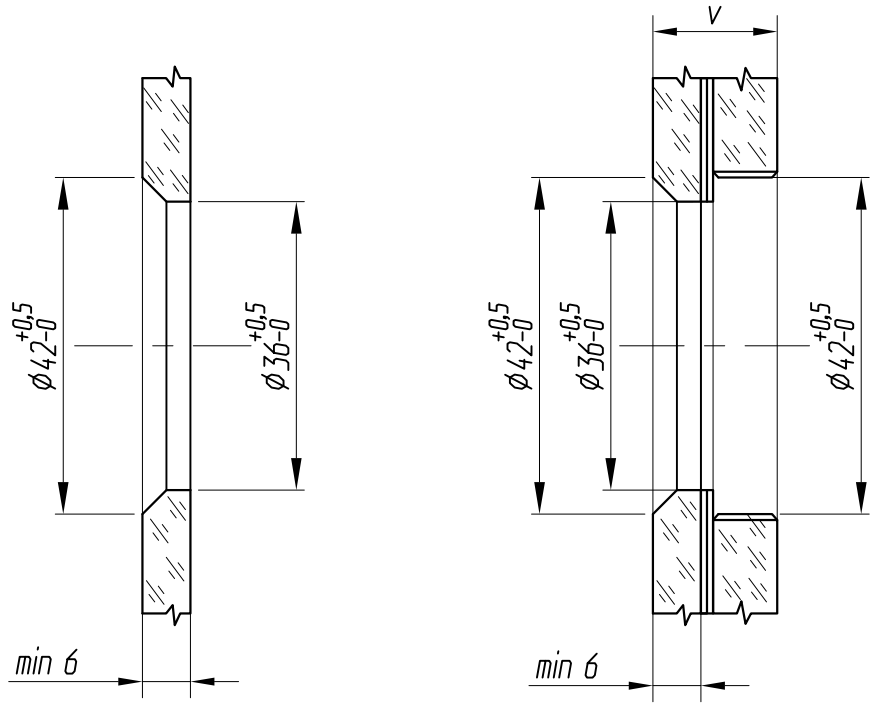

V- glass thickness, 23 - (min6mm-13,52mm), 27 - (12mm-17,52mm), 31 - (13,52mm-21,52mm), 35 - (15,52mm-25,52mm)

ARP-Z800 swivel fitting countersunk head

ARCHITECTURAL GLASS PRODUCTS

WWW.ARPRUS.COM
INFO@ARPRUS.COM